intertrafo

inter MED

Specifications interMED mounting stand

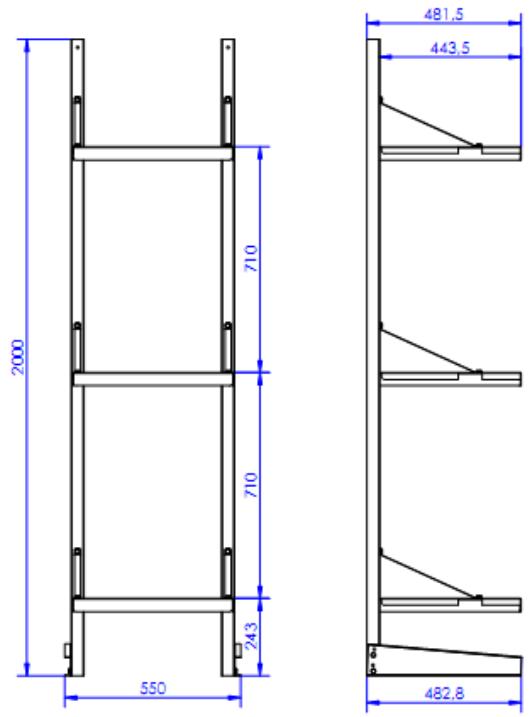

CE

Features	For three interMED transformers.
	Maximum load 100kg/shelf
	Three shelves with cooling slots
	Must be fastened to the wall on the top side of stand
Material	Surface-treated steel
Dimensions	550 x 483 x 2000mm
	(Maximum height with interMED transformer 2150mm)